ISSN 2395-1621

Design And Modelling of a Fixture for Plannet Carriers

#1Purvi Chauhan, #2Aniket Patel, #3Smit Detroja, #4Ruchit Sabhadiya

1pdchauhan@bvmengineering.ac.in
3detrojasmit@gmail.com
4ruchitsabhadiya@gmail.com

#1Assistant Professor, Production Engineering Department, BVM Engineering College, Vallabh Vidhyanagar, Gujarat, India.
#234Undergraduate Student, Production Engineering Department, BVM Engineering College, Vallabh Vidhyanagar, Gujarat, India.

ABSTRACT

The time required to set up a work piece in its precise position via clamping and other miscellaneous devices is very protracted. A holistic approach in studying all machining and environmental factors was developed to synthesize and examine setup plans and fixture configurations. Based on the study of the s pecific gear: Planet Carriers, which whilst in their various machining operations ascertained to be an arduous task which ingests excessive time, requires highly-skilled labor and is highly uneconomical. A conceptual design of a fixture which is self-centering, highly precise, accurate, reliable, consumes little amount of time, provides easy interchangeability, can withstand a number of machining constraints, which in turn increases productivity is developed. At the culmination, we shall reduce the strenuous preceding tasks and enhance the production rate and operations altogether.

ARTICLE INFO

Article History

Received: 28th February 2016

Received in revised form :

1st March 2016

Accepted: 3rd March 2016

Published online :

5th March 2016

Keywords — fixture, design, planet carrier, computer aided designing, vertical machining.

I. INTRODUCTION

In the dawn of manufacturing a new work piece, different constraints are to be studied and evaluated. In this met iculous study of the operations, machining constraints and other parameters, the identification of the production type to be a mass production or a single work p iece production is to be identified beforehand. “Time” is the most influencing parameter wh ile producing no matter what in abundance. While beginning the mach ining process after the pre-working on the metal is co mpleted, the workp iece when loaded on the machining center is to be held, supported and located to ensure that it is mach ined with accuracy and precisely at the position predetermined, wh ich then allows the tool to cut or shape the work p iece as per the requirement. Conventionally basic general purpose machine tools offer flexib ility but they were not suitable for mass production as they acquired longer setup time and ponderous adjustments. As the technology advanced special purpose machines were introduced but they were not flexib le, they abate certain costs but were not appropriate for mass production. This led to development of high flexible machine tools along with appropriate fixtures.Whilst the mach ining center in a mass production target, a need of a fixture is made a mandatory prerequisite.A fixture is a special purpose tool which facilitates production (machining, assembling and inspection operations) when work pieces are to be produced in mass production. Study of components, geometric models of components, step by step design calculation, selection of tooling material and solid modelling of tool will lead us to optimal and feasib le fixtu re design . High-performance, precision, accuracy and interchangeability are crit ical elements of a fixture. In culmination, a fixture decreases cycle time required for loading and unloading of a part, escalates production rate, reduces accidents, are h ighly versatile and reliable and most importantly, decreases the cost of production.While designing this work, a good number of literature and titles written on the subject by renowned authors are referred. Various areas related to des ign of fixture like mach ining fixture knowledge, optimizing workp iece setups, modelling of forces, imp roving workpiece location and high efficiency tools are already been very well described by various renowned authors. Makwana and Gosavmi have found that there are d ifferent steps and approaches are available for designing the fixture. A mong those geometry method (3-2-1 princip le) and it is very useful for the complex fixture design though it is the basic princip le o f the fixture design [1]. Hunter, R., Vizan, A., Perez, J., Rios J Proposed the methodology for design of a fixture wh ich includes the realization of two stages [2]. An important characteristic of a workp iece-fixture system is that locators are passive elements and can only react to clamp ing forces and external loads, whereas clamps are active elements and apply a predetermined normal load to the surface of workp iece to prevent it fro m losing contact with the locators [3]. X.P Li, A.Y.C Nee, Y.S Wong, H.Q Zheng developed a theoretical model for forces in milling based on a predictive

mach ining theory and the mechanics of milling [4]. J. C. Trappey, C. R. Liu published a rev iew of fixture -design research out of which most of it was carried out in the 1980s. The major topics reviewed are the fixtu ring princip les i.e. supporting, locating and clamping, then automated fixtu re design i.e. configuration, assembly and verification, and fixture hardware design i.e. dedicated, modular and electric/ magnetic types [5]. All the research in this paper canbe enhanced by implementing semi-automat ic and automat ic principles [7][8][9].

A very peculiar design of a gear discussed in this paper is the planet carrier, wh ich is a form o f an epicyclic gear train. Due to its atypical design, it is difficult to mach ine the planet carrier. Presently, in all the basic mach ining operations that are carried out on the planet carrier, the engineer faces a lot of glitches insetting up of the work p iece. Due to unavailable fixtures for these peculiar kind of work p ieces, a non-conventional setup is preferred by the engineer. The use of V-blocks, clamps and screws for holding and supporting of the work piece in a horizontal setup of the workpiece on the Horizontal Machin ing Centre hints to a failure of a lot of mach ining constraints and is also highly time consuming activity. In endeavouring to abate all the problems faced during the use of non-conventional tools, this paper shows a conceptual design of a fixtu re that can eliminate all the strenuous preceding tasks and enhance the production rate and operations altogether. The following are the problems that occur during machining planet carrie rs in the existing method:

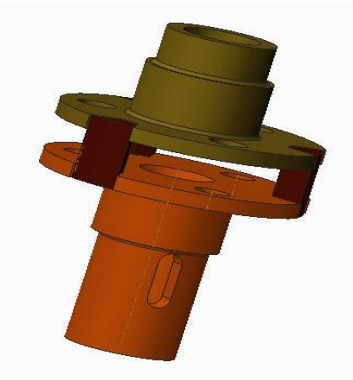

Figure 1 Planet Carrier

- Balancing of top and bottom part is an arduous task
- Centering the work piece consumes a lot of time
- Vibrational and mechanical errors are high
- Offset while operation
- High skill required
- Consumes a great amount of t ime (3-4 hours minimum)

II. FIXTURE MO DELLING

This design eliminates all the prevailing problems and adds numerous advantages to it. These simple co mponents are designed in Co mputer A ided Design Soft ware's (particularly Creo 2.0) relat ive to dimensions and geometry of the planet carriers along with the Vertical Machining Centre's specifications, here SANCO PM-5. While aiming to give an absolute solution to the prevailing problems, the following components of the fixture developed proved earnest:

1) Fixture drum
2) Self-centering ring
3) Supporting Cylindrical blocks
4) Rockwell clamps

2.1 Fixture drum

This is the key component of the fixture assembly. The fixture dru m is a fabricated part wh ich is made by welding the upper plate, base plate, simple hollow cylinder, and the ribs together. This structure is rich in mechanical, thermal, and machining properties.The fixture drum is assembled by the following steps:

Step-1. Develop the base plate: The base plate is manufactured by the process of casting. The base plate is given T-slots that allow the fixture to easily get inserted and removed fro m the bed of the machine, wh ich makes the attachment easy to use.

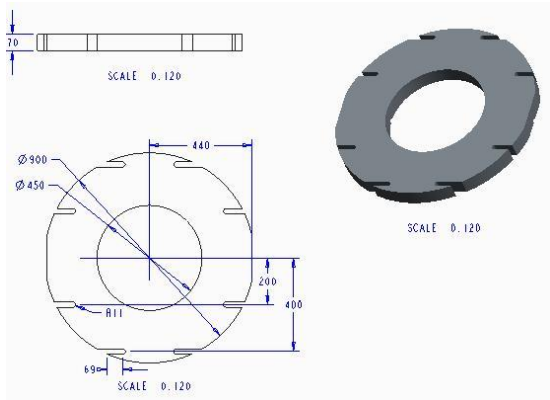

Figure 2 Base Plate

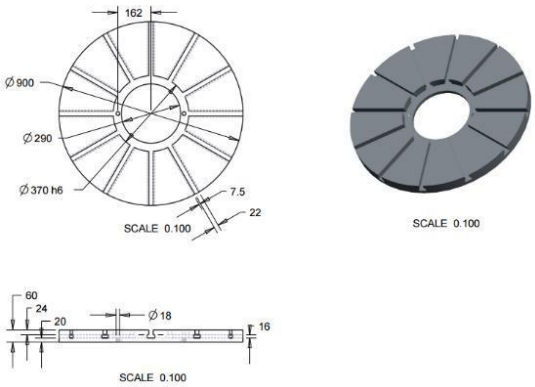

Figure 3 Upper Plate

Step-2. Develop the upper plate : The upper p late is also manufactured by the p rocess of casting. The upper plate has 12 equispaced T-slots on the top-side. The T-slots are produced with the help of slotting and planning machines, whichever seems economical and are prov ided to allo w the supporting blocks and the Rockwell clamps to slide frontwards and backwards as per the outer diameter of the carrier. There is a flange provided in the center that has 2 holes to incorporate the self-centering ring of high tolerances by the help of screws.

Step-3. Develop the hollo w cylinder: This part is manufactured by the process of rolling. This will enhance the mechanical properties of the fixture and also allow the part to weld properly with the other parts, and hinder welding defects. The hollow cylinder is given an inner diameter approximately 30 percent higher than the largest outer diameter of the planet carrier to be inserted in it.

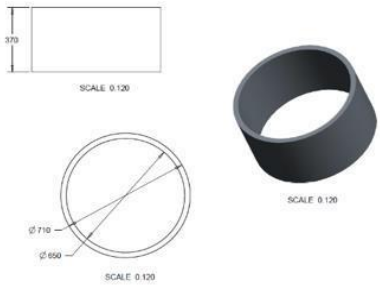

Step-4. Develop the ribs: These are manufactured by forming or casting, whichever seems economical. They are to be welded with the use of shielded metal arc welding due to its fast operation and high strength along with the other advantages the operation offers. They can prevent mechanical and vibrational errors.

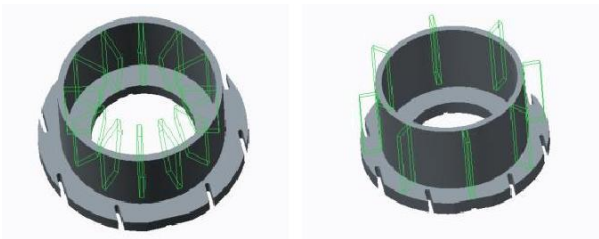

Figure 5 (a) Ribs position to be welded on the outside; (b) Ribs position to be welded on the inside

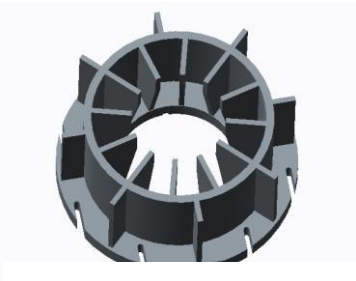

Figure 6 After ribs are welded

Step-5. Welding the upper plate at the upper part of the cylindrical drum, and the base plate to the other end of the drum and weld ing ribs both inside and outside the hollow cylinder to enhance the mechanical properties.

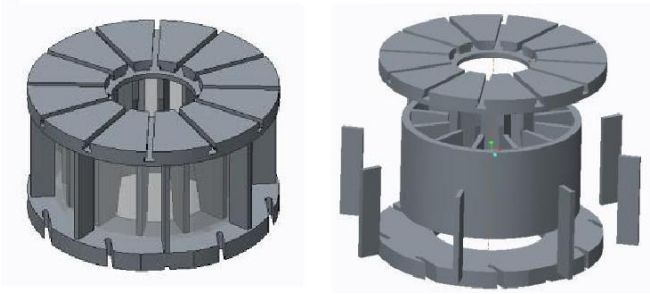

Figure 7 (a) Final assembled fixture drum-Isometric view (b) Fixture drum-Exploded view

This component is the base of the whole fixture assembly to be set up. This supports the entire setup. It is made of cast steel to prevent vibrational and mechanical errors and to permit relaxed welding. This co mponent weighs an approximate of 200-300 kilograms. Hence to move it, we will need the help of a crane. The suggested solution to this problem is that the cylindrical dru m fixtu re can be shifted and maintained on the Vert ical Machining Centre's bed which is roughly 5 meters long, so this way it can be used often and kept back at a corner when not in use.

2.2 *Self-Centering Tapered Ring*

The principle of self-centering become mandatory in designing a fixture for a circu lar component because it prevents a high time consuming activity that is to determine if the setup is placed precisely on the centre of the machine bed. In the current method, the dial gauge is fitted on the automatic machine and is rotated around the inner and outer diameters again and again after continuous shifting and re - positioning of the setup, until the workpiece is centered. This ring is provided with h igh tolerances to avoid errors and easy fitting and removal of it. The ring is given a taper on the inner diameter o f the ring, so as to allow easy removal of the carrier. The thickness of the ring is maintained the same as the upper plate of the cylindrical drum. Th is ring has 2 holes threaded parallel to each other in it to incorporate screws to fit in the threaded holes provided in the upper plate of the cylindrical dru m. The ring is to be changed as the outer diameter of the workp iece (here as the outer diameter of the bottom flange) changes. Hence, the rings are to be manufactured for every diameter the workpiece comes in.

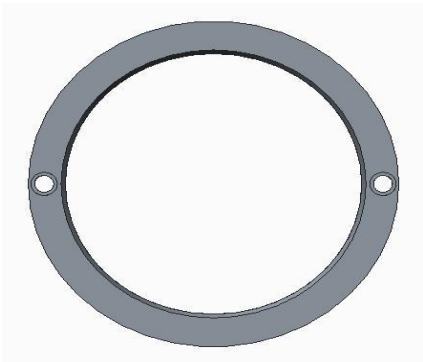

Figure 8 Self centering ring-Top View

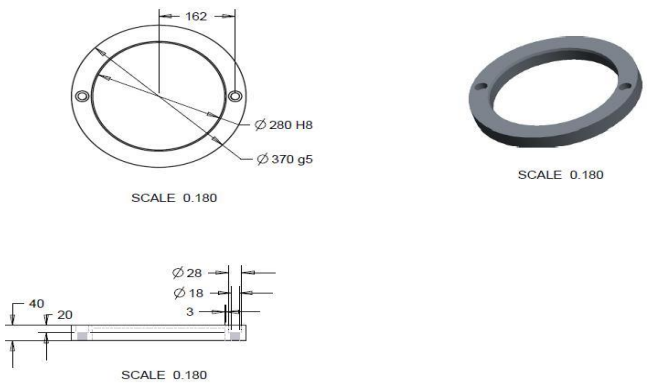

Figure 9 Self-centering Ring along with dimensions

2.3 Supporting Blocks and Rockwell Clamps

The main fundamental principles of designing a fixture are the supporting and locating principles. This is a slightly tricky concept because in a fixture there can be more than one supporting or locating positions. Once the job is butt in a position having a single co-ord inate dimension specified, it cannot be butt elsewhere.

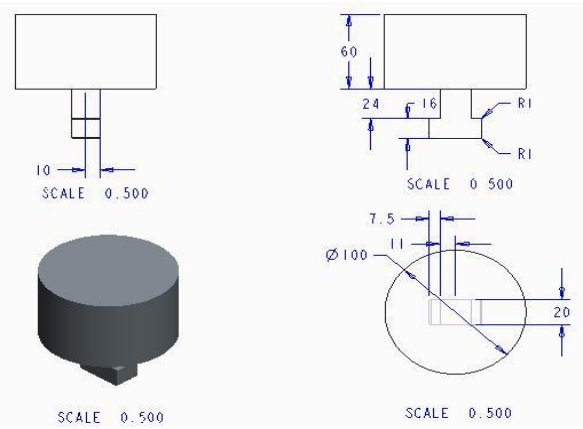

Figure 10 Supporting Block-Isometric View with dimensions

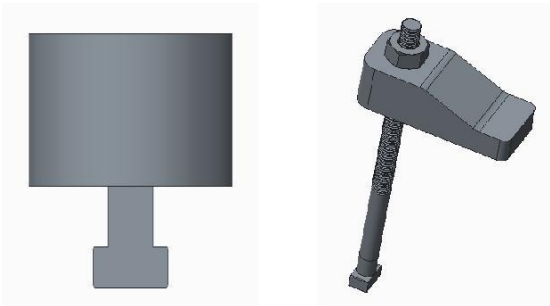

Figure 11 (a) Supporting Block-Side View (b) Rockwell Clamp -Isometric View

The whole of the resting blocks for the job is to be developed with the help of forging only because it will only provide high tensile and mechanical strengths required for the component. The upper surface is precisely parallel to the base plate and the upper plate of the cylindrical dru m. It has an inverted T-shaped geometrical structure attached at its bottom which helps in attaching the supporting block to the upper plate of the cylindrical dru m by fitt ing in the T-slots provided on the upper plate for th is sole purpose. The T-slots are chamfered along the edges at opposite sides to provide smooth flow of operation while inserting and removal o f theses blocks before and after mach ining respectively. The planet carrier is rested on these blocks.

The basic requirements of clamping devices are that they should not disturb the equilib riu m position of the workp iece with respect to the locating and supporting elements, present minimu m hazards to the operators and provide fast clamping action. They serve as locking devices in this setup. Clamps should not be allowed to interfere with tool path and the loading and unloading of the workpiece. In this assembly, the clamps are provided with threads so that the upper portion can move up and down as per the specified height. These can be selected as per the general dimensions and availability in the industry. These are standard parts existing in d ifferent machin ing operations. The number of supporting blocks and the rockwell clamps to be used can be carefully chosen as per the necessity. In this case we have used a 3 supporting blocks and 3 rockwell clamps.

III. PRO CEDURE TO USE THE FIXTURE

The fixture can be employed in the dint of the steps and their respective pictorial representation mentioned below:

Step-(1) Attach the cylindrical drum to the bed of the Vertical Machining Center at the required position.

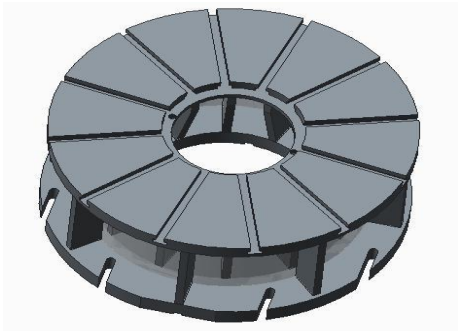

Figure 12 Step-(1)

Step-(2) Screw the self-centering ring to the upper plate of the cylindrical drum.

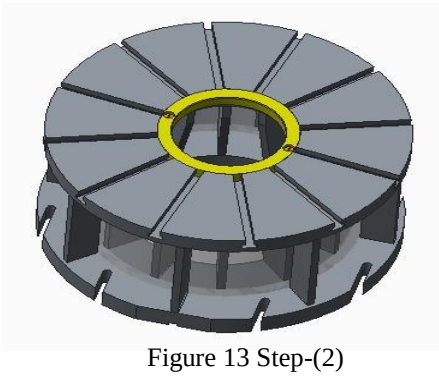

Figure 13 Step-(2)

Step-(3) Insert the resting blocks.

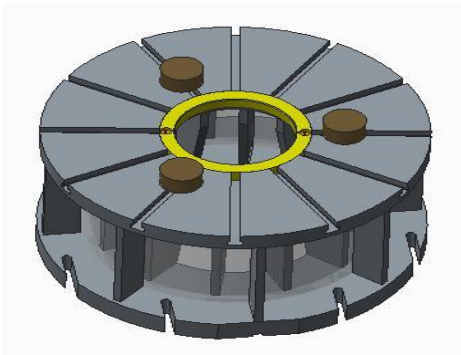

Figure 14 Step-(3)

Step-(4) Load the planet carrier.

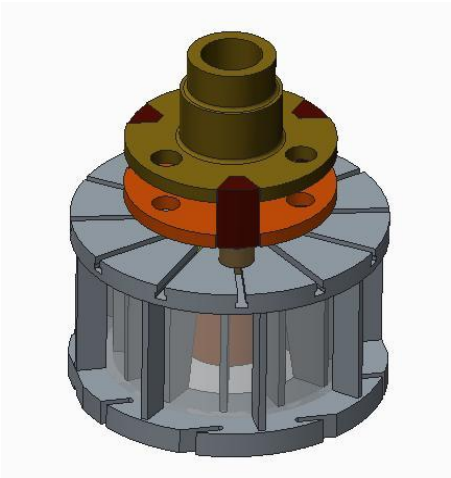

Figure 15 Step-(4)

Step-(5) Insert the Rockwell clamps and rigidly fix the planet carrier.

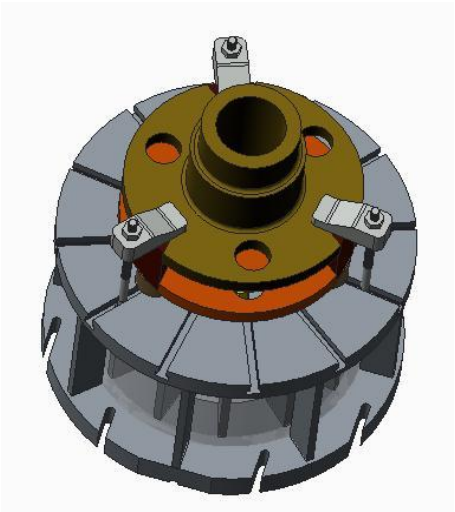

(a)

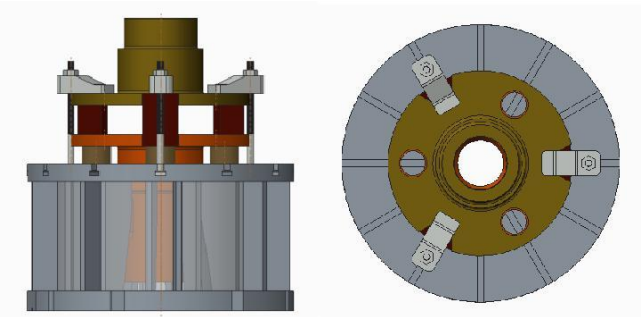

(b) (c)

Figure 16 (a) Step-(5)-Isometric view; (b) Step-(5)-Side view; (c) Step-(5)-Top view

The above displayed figure 16 is the final assembly view that shows the planet carrier has been safely and easily incorporated in the fixture and is ready for mach ining. In Fig. 16. (b) Step-(5)-Side v iew, the t ranslucent section of the drum shows that the ribs inside the hollow dru m does not touch the bottom flange of the planet carrier because it has already been grinded and upon touching it, the surface may be ruined. The carrier is also to be held with some gap above the ground, to prevent the foot of the carrier to touch the ground to again prevent any finishing damages.

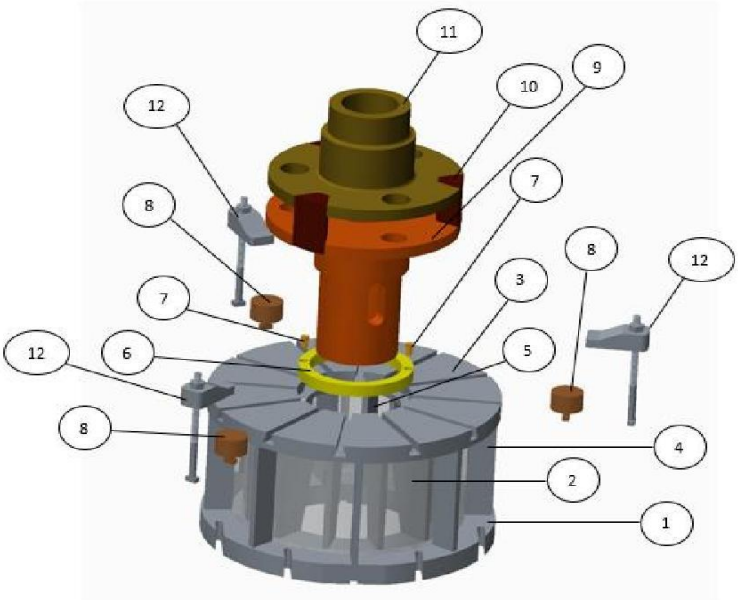

Sr. No.	Quantity	Name	Manufacturing Method
1	1	Base plate	Casting
2	1	Drum	Rolling
3	1	Upper plate	Casting
4	8	Strip	Casting
5	12	Rib	Casting
6	1	Taper Ring	Metal Forming
7	2	Screw	Pre-Available
8	3	Cylindrical Block	Forging
9	1	Flange-1	Forging
10	3	V-block	Casting
11	1	Flange-2	Forging
12	3	Rockwell clamp	Pre-Available

Figure 17 Exploded view of the fixture with Bill of material

IV. Results and Analysis

- The chief advantage of the fixture developed is that it reduces the setup time fro m 180 minutes to merely 45 minutes. The detailed time study is shown below. The

reading of the current scenario is taken by a stopwatch. The time when the fixture is imp lemented is taken fro m standard formu las involving distance, speed and time and very met iculously calculated PMTS (Predetermined Motion Time System). All the different components with their speed

of carry and the distance to be travelled and other relevant parameters were studied and formulated to obtain the results. Every calculat ion is based on industrial standards and motion and time study principles.

Operation No.	Operation	Time (in minutes)
1	Cleaning the bed and setting zero co-ordinates	20
2	Loading of V Block-(1)	10
3	Loading of V Block-(2)	10
4	Setting the height and width of V Blocks	10
5	Loading of work piece via crane	10
6	Roughly balancing the horizontal setup (top and bottom part)	30
7	Attaching clamps	15
8	Checking the center with dial gauge	15
9	If not centered, re-start from operation number-5 again until work piece is centered	60

Table 2 when the fixture is implemented

Operation No.	Operation	Time (in minutes)
1	Move the cylindrical drum to the required position on the VMC	5
2	Screw the self-centering ring to the upper plate of the cylindrical drum	5
3	Insert the resting blocks	10
4	Load the planet carrier	15
5	Insert the Rockwell clamps and rigidly fix the planet carrier	10

- The advantage of this abridged time in the mach ining operations to be performed are explained below.

Case Study: If a manufacturer acquires an order to manufacture 20 planet carriers . Now, if he acquires 20 planet carriers in a month, he therefore may be willing to manufacture 240 p lanet carriers in a year. Let us assume he is preparing to enlarge the 6 holes in the p lanet carrier v ia boring. For a single setup without the fixture designed, he may take an approximate o f 180 minutes to setup the work piece. Hence, if he does that for every 20 of them acquired in a month and every 240 he may get in a year, he is prone to a huge time loss just during setup, let alone the losses that occur during mach ining. The calculated ingested time is a whopping 43,200 minutes.Now, if the manufacturer incorporated this fixture designed he will be ab le to setup the time of the workp iece to just a mere 45 minutes, that in culmination of a fiscal year can be accounted to only 10,800 minutes.The time reduced via this case study is astonishingly “75 percent”.

- Saving time is just an additional way of saving money. This is possible because the manufacturer can now acquire 75 percent more orders owing to the time saved. This increases the revenue and hence increases their creditability and therefore the manufacturer proliferates.

V. CO NCLUSIO NS AND FUTURE SCO PE

- The fixture can be emp loyed for vertical mach ining and the operations like boring, internal threading, broaching and drilling can be performed.
- Not only can this be used to machine the planet carrier but also machining a circular workpiece with d ifferent dimensions and shapes can be incorporated in this fixture assembly.
- Another manufacturing process, such as welding can also be performed in this setup.
- Attaching the planet gears and other miscellaneous parts can be made easy.
- Due to the simp le design and setup, there is no need for a skilled worker to operate the fixtu re. There is no need for more than one person to set up the fixture and analyze it continuously in each step.
- A variety of wo rk pieces can be incorporated, by manufacturing required self-centering rings of respective diameters, which ensure the fixtures interchangeability.
- The sturdy structure of the fixture abates the problem of vibrational errors.
- There is no probability of an offset due to the introduction of the self-centering ring and the Rockwell clamps which locate the fixture in the required position.
- There is an utter need to discover new self-centering principles.
- The cost of manufacturing can be min imized by reducing the size of the cylindrical dru m and increasing the size and number of supporting blocks used.
- This fixture requires finite element analysis wh ich will prove the practicality of the design.
- The fixture designed can be enhanced by introduction of new self-centering principles and automating the fixture with the help of a pneu matic and hydraulic assisted mechanisms.

ACKNOWLEDGEMENT

The authors wish to acknowledge the support of the esteemed industry Elecon Engineering Private Limited and its benevolent engineer Mr. Kiran J. Patel for this research work. The authors also wish to acknowledge the magnanimity of the cognizant M r. Saurin S. Sheth of GCET Engineering College for his immense dedication in guiding us in this research paper.

REFRENCES

[1] K. M. Viramgama, R. D. Makwana, A study on design of fixture for valve body for CNC machines. International Journal of Advance Engineering and Research Develop ment, Volume 1, Issue 12, December -2014, p.42-46.

[2] R. Hunter, A. Vizan, J. Perez, and J. Rios, Knowledge model as an integral way to reuse the knowledge for fixtu re design process, Journal of material processing technology, 164 – 165, 2005, 1510–1518.

[3] C. Xiong, M. Wang,Y. Xiong, On Clamp ing Planning in Workpiece-Fixtu re Systems. IEEE transactions on automation science and engineering, July 2008, vol. 5, no. 38.

[4] X. Li, A. Nee, S. Wong, Q. Zheng, Theoretical modelling and simu lation of milling forces, Journal of Materials Processing Technology, 1999, 89-90, pp. 266-272.

[5] J. C. Trappey, C. R. Liu, A literature survey of fixture design automation, The International Journal of Advanced Manufacturing Technology, pp. 240-255, 1990.

[6] Hui Wang , Yiming (Kev in) Rong, Hua Li, Price Shaun. Co mputer aided fixture design: Recent Research and Trends for Elsevier Volume 42, Issue 12, December 2010.

[7] Bhavya R. Gajjar, Saurin Sheth. Design and Automation in Back Plug Press Fitting Process of Ball Pen Assembly, Applied mechanics and materials, Trans Tech Publicat ion, 2014.

[8] Hardik Gangadia, Saurin Sheth, Pu rvi Chauhan. Design & Modeling of Special Purpose Equip ment for Shell-Diaphrag m Weld ing in Conveyor Pulley, 2nd International Conference on Innovations in Automation and Mechatronics Engineering, Elsevier Limited, Procedia technology, 2014

[9] Sau mil Desai, Saurin Sheth. Study and Proposed Design of Dual Faceplate Centrifugal Casting Machine for manufacturing of turb ine bearing, Conference: International Conference on “Mechanical, Material, Industrial, Automotive, Aeronautical and Nano Technology” (MIANT-2015), At Jawaharlal Nehru University, New Delh i-110067, Volume: 2

